ITEM	COMPOSITION	MATERIAL	COLOR	REMARKS	ASSY NO G107
1	6 INCH CASE COVER	e-mateX FB-0215	TRANSPARENT NATURAL		1
2	6 INCH CASE BODY	e-mateX FB-0437	BLACK		1
3	8 INCH SLIDE LOCK	e-mateX FB-0423	NATURAL		1

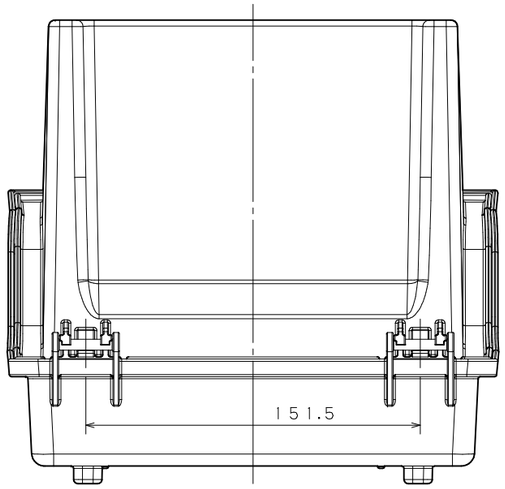

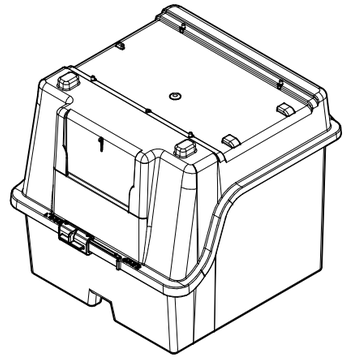

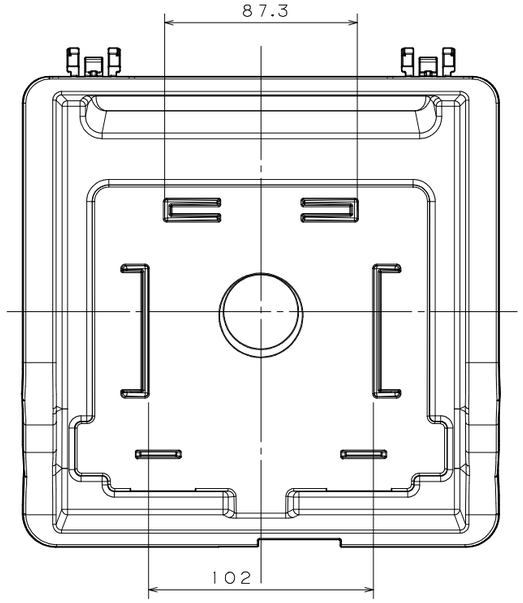

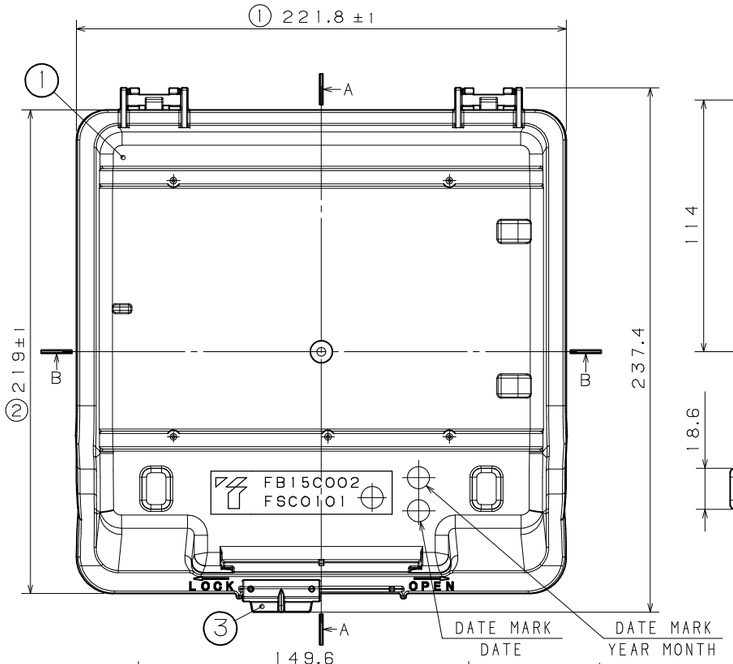

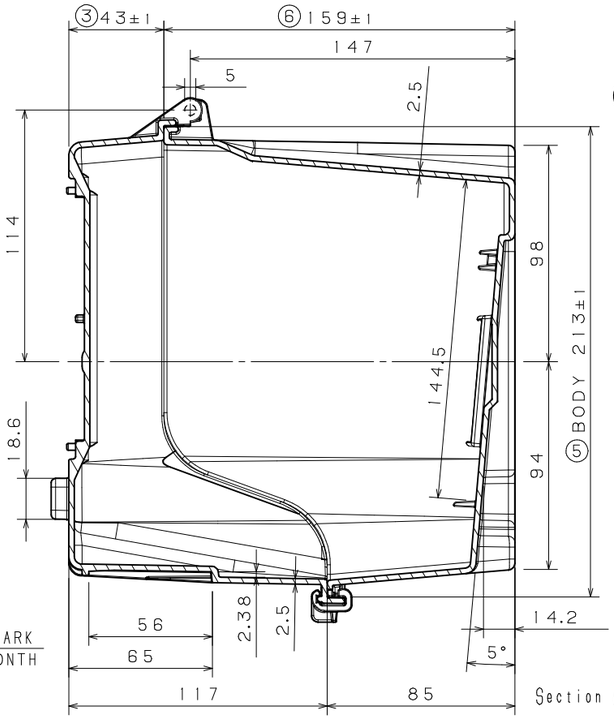

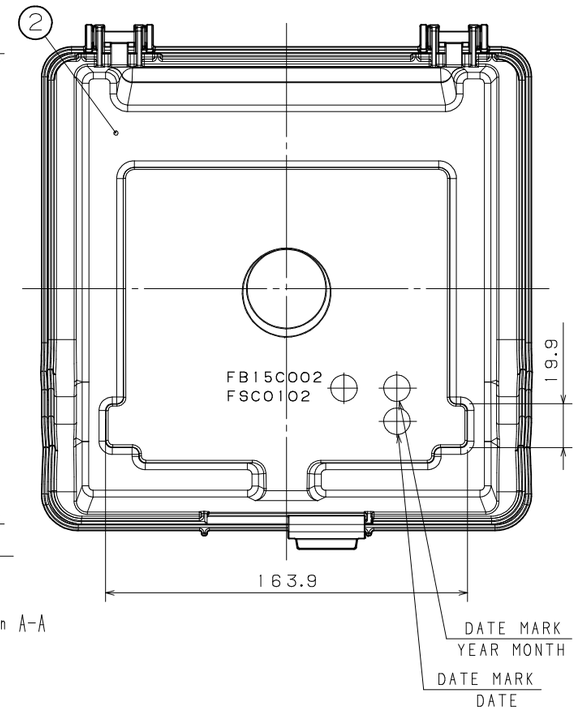

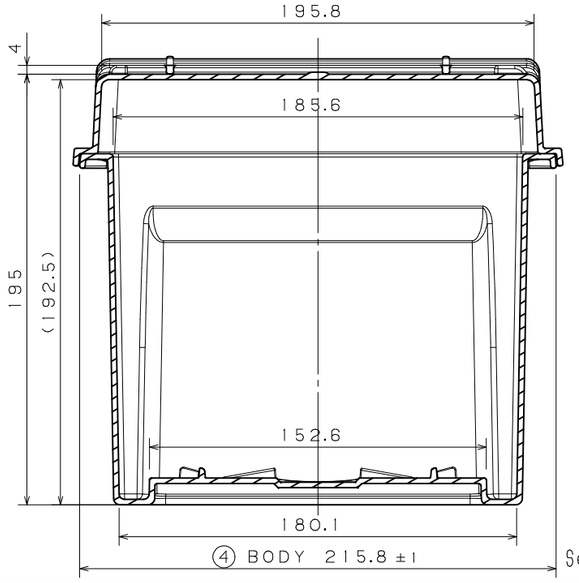

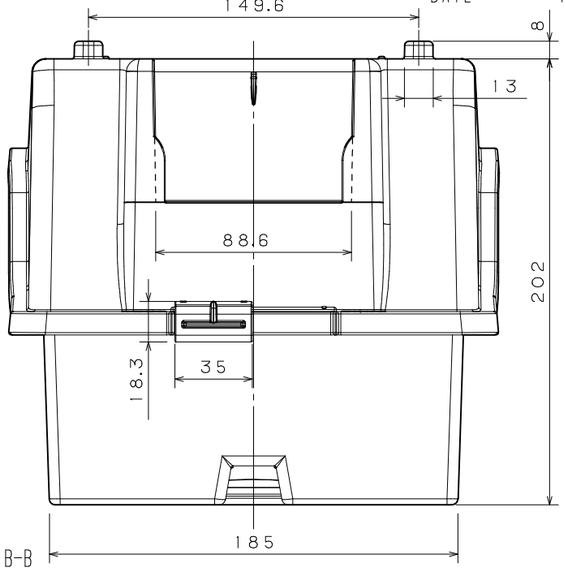

EACH DIMENSION THAT IS MENTIONED ON A DRAWING SHOULD BE UTILIZED AS A CUSTOMER'S INTERNAL CONFIRMATION.

PRODUCT NUMBER	PRODUCT NAME
FB15C002	6 INCH CASE ASSY

3RD ANGLE PROJECTION	SCALE	DRAWING NUMBER
	1/2	FSC0105G107